User's Manual

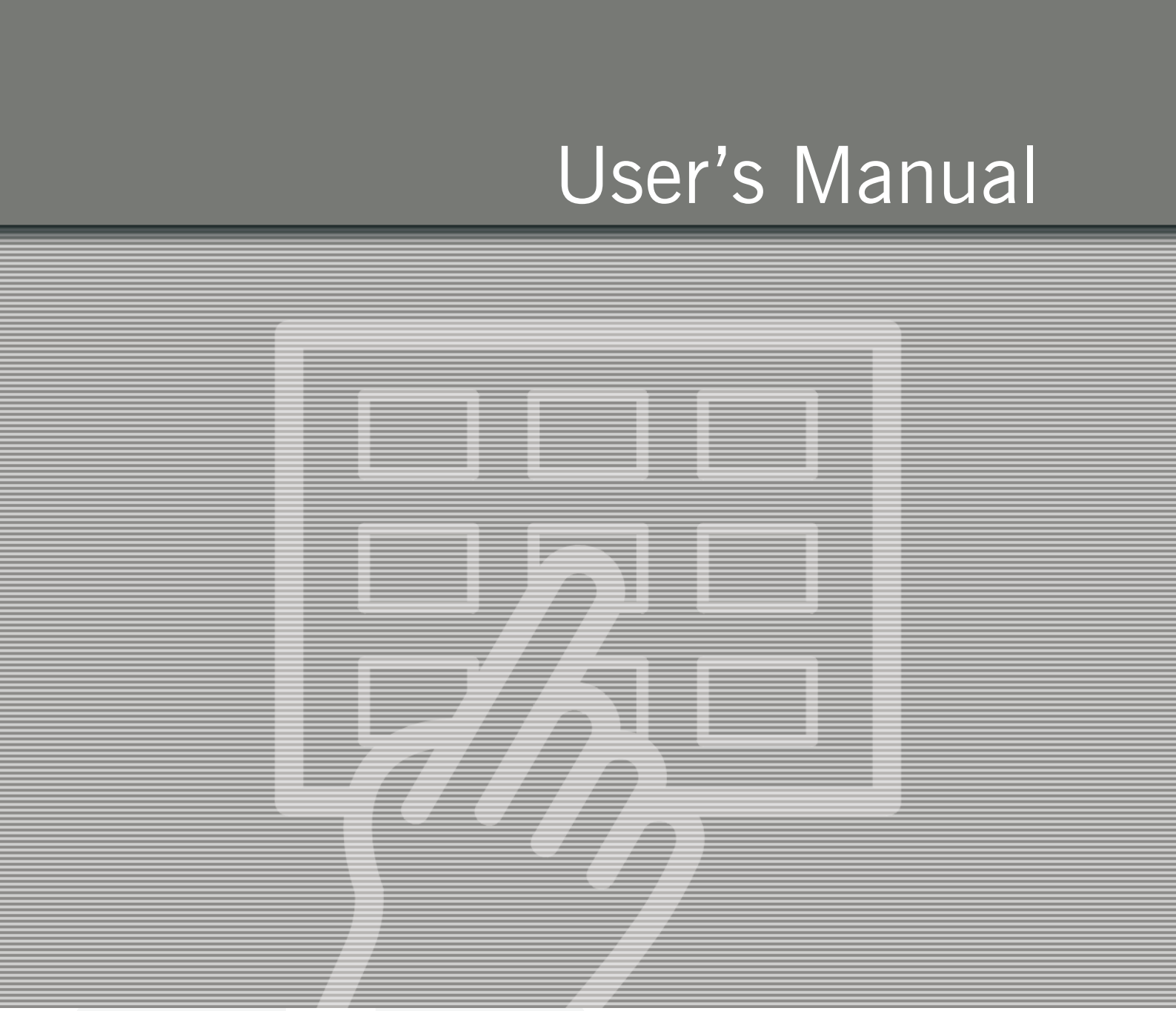

CONCEPT 302 ECDLF

GLUNZ & JENSEN
DEGRAF

User's Manual

CONCEPT 302 ECDLF

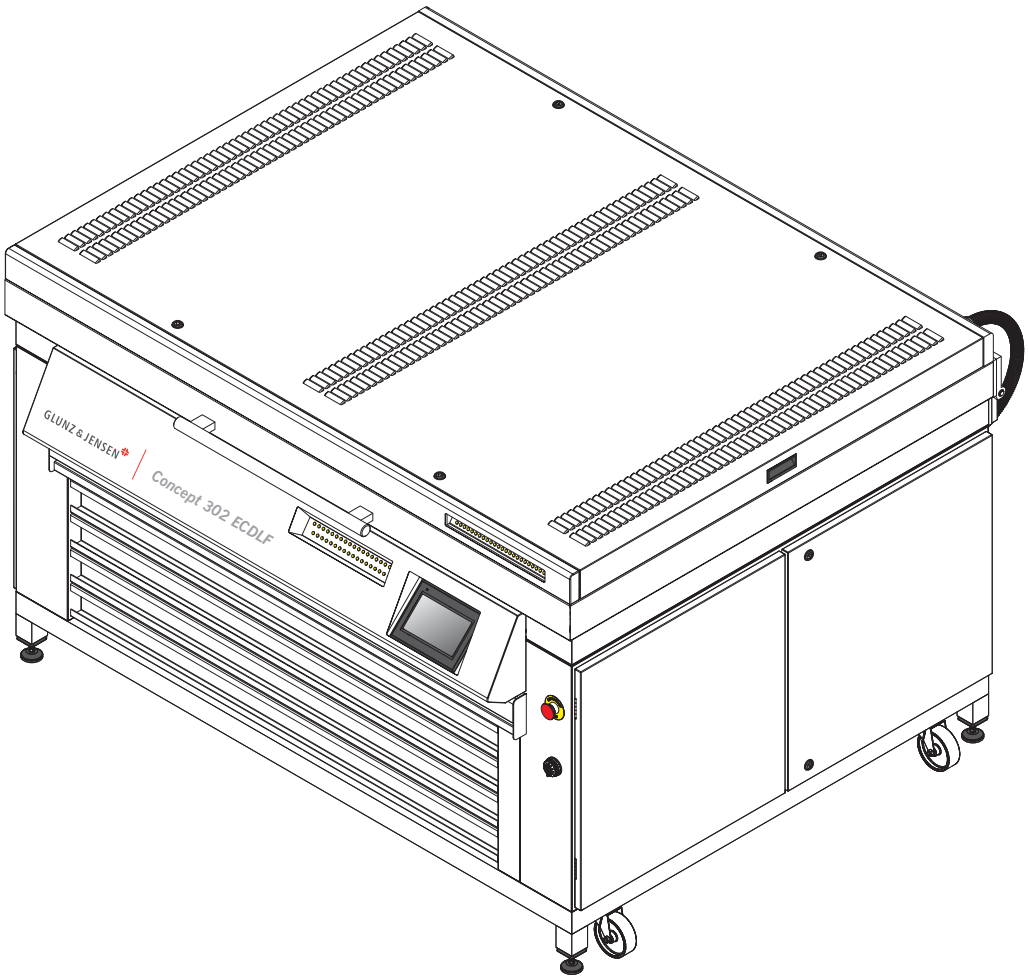

T11408

Edition AC, April 2015
This book has part No 10076712 (GB)

Always read the *Safety Instruction Manual part No 21741* before installing or operating the equipment.

This manual is published by: **Glunz & Jensen Degraf S.p.A.**
'Il Girasole' - Palazzo Donatello 8/03b
20084 Lacchiarella (MI)
Italy
Internet: www.degraf.glunz-jensen.com

Copyright © 2014 by Glunz & Jensen Degraf S.p.A.

Table of contents

Part 1: General information 1-1
About this manual 1-1
Intended use of this manual 1-1
Reservations 1-1
Notes, cautions, and warnings ! 1-1
Unintended use of the equipment. 1-2
Intended use of the equipment. 1-2
Installation 1-2
Service assistance 1-2

Part 2: Daily use 2-1
General 2-1
Safety warnings 2-1
Initial operation of the equipment 2-3
Main screen description. 2-6
Exposure section 2-7
Light finisher section 2-8
Dryer section 2-9
Equipment status 2-11
Counters 2-12
Analog and digital inputs/outputs 2-13
Alarms and warnings 2-14
Alarm 2-14
Warning 2-14
Alarm/warning history screen. 2-15
List of alarms/warnings 2-15
Service menu 2-17
Tool 2-18
Temperature 2-19
Data 2-21
Jobs 2-22

Part 3: Making plates. 3-1
Starting an exposure cycle 3-1
Starting a dryer cycle 3-2
Starting a light finisher cycle 3-3

Part 4: Maintenance 4-1

General 4-1
Filling up the cooler tank 4-1
Cleaning the equipment. 4-2
Exposure lamps UV output measurement 4-2
UV lamps replacement 4-3
General 4-3
Exposure lamps replacement 4-4
Light finisher lamps replacement 4-5

Part 1: General information

About this manual

Intended use of this manual

This manual describes the common use procedures of the equipment. It is intended for the daily user and should be kept with the equipment for reference at all times.

Reservations

- This manual was written and illustrated using the best possible information available at the time of publication.
- Any differences between this manual and the equipment reflect improvements introduced after the publication of the manual.
- Changes, technical inaccuracies and typographic errors will be corrected in subsequent editions.
- As a part of our policy of continuous improvement, we reserve the right to alter design and specifications without further notice.

Notes, cautions, and warnings !

Throughout the manual notes, cautions, and warnings are written in bold like the example below:

Electrical installation must conform to local regulations and guidelines.

Symbol	Meaning	Explanation
	Note	The operator should observe and/or act according to the information in order to obtain the best possible function of the equipment.
	Caution	The operator must observe and/or act according to the information in order to avoid any mechanical or electrical damage to the equipment.
	Warning	The operator must observe and/or act according to the information in order to avoid any personal injury.

Unintended use of the equipment

Glunz & Jensen Degraf S.p.A. does not take any responsibility for any damage or accidents caused by unintended use of the equipment:

- It is absolutely prohibited to make any modifications, electrical nor mechanical, of the equipment. If however this prohibition is disregarded, Glunz & Jensen Degraf S.p.A.'s warranty will no longer apply.

Intended use of the equipment

- This equipment is a part of a full range dedicated for the treatment of flexographic printing plates. This range includes exposure, processor, dryer and light finisher.
- This equipment is designed to expose, dry, post-expose and light finish of flexographic printing plate before and after the washout process.
- This equipment is designed to work with plates which has been washed with non-chlorinated hydrocarbon based solvent. Maximum operating temperature must be 15°C below the lowest flash point of the liquid. Always consult your dealer or the Material Safety Data Sheet (MSDS) for information about the hazards and necessary precautions for the liquids you are using.
- This equipment has not been designed as an explosion proof equipment. Do not use combustible liquids for anything other than their intended uses.

Installation

- Never install the equipment in explosive environments.
- It is the responsibility of the owner and operator/s of this equipment that the installation is made in accordance with local regulations, and by engineers authorized to carry out plumbing and electrical installations.
- Installation, service and repair must be performed only by Service Technicians who are trained in servicing the equipment.
- The manufacturer cannot be held responsible for any damage caused by incorrect installation of this equipment.
- The equipment is intended for installation in a restricted access location only.

Service assistance

- If help is needed to correct any problem with the equipment, please contact your supplier.

Part 2: Daily use

General

This equipment is designed to expose, dry, post-expose and light finish of flexographic printing plate before and after the washout process.

The equipment is divided in the following sections:

- **Exposure section** - 24 lamps of 80W to ensure even exposure.
- **Dryer section** - 4 drawers, 4 heating resistors.
- **Post exposure/light finishing section** - 20 UVA lamps (60W) and 19 UVC lamps (75W).

This processor is equipped with the graphical finger touch display which ensures very easy control.

Safety warnings

To use this equipment safely, it is necessary that operators and maintenance people follow the safety instructions and safety cautions and warnings specified in the manuals.

The equipment is equipped with emergency switch which allows the operators to stop the equipment in case of emergency. This emergency switch cut off the power supply of the entire equipment.

Make sure that the risk or the problem has been eliminated before restoring the power on the equipment.

To release the emergency switch, turn it clockwise. The equipment has to be restarted following the "Initial operation of the equipment" later in this manual.

For the safety of operators, the equipment is equipped with interlock switches for the opening of the exposure cover, dryer and light finisher drawers during operation, and for removing the rear panels of the equipment. If any of the interlocks are not installed or closed, the equipment or a specific section of the equipment will not operate. If an interlock is activated during operation, the equipment or a specific section of the equipment stops immediately the concerned section.

The exposure section is fitted with a safety interlock to prevent user to be exposed to UVA light radiation.

The dryer section is fitted with a safety interlock to prevent user to be exposed to solvent fumes.

The light finisher drawer is fitted with a safety interlock to prevent user to be exposed to UVC and UVA light radiation.

UVC light radiation is dangerous for human skin and particularly the eyes. Even a short exposure time may cause burning in the lower skin layers and damages the eyes retina. Due to the safety systems installed, it should never be required to check the UVC tubes by view the UVC light directly when operating, maintaining or servicing the equipment. However, in case of need it is mandatory to wear a welding helmet with at least shade 6, safety clothes and gloves.

The equipment is equipped with UVA and UVC fluorescent lamps which contain mercury. Dispose according to local, state or federal laws.

If lamps are broken, ventilate area where breakage occurred. Clean up with mercury vacuum cleaner or other suitable means that avoid dust and mercury vapor generation. Take usual precautions for collection of broken glass. Use cut resistant gloves and appropriate respirator. Clean up requires special care due to mercury droplet proliferation. Place materials in closed containers outside the building to avoid generating dust.

Flexographic printing plates are considered articles by e.g. OSHA (CFR1910.1200). An article does not require a Material Safety Data Sheet. However, unexposed plates contain material that may cause skin irritation or allergic skin reactions and sensitization in susceptible persons.

For handling the plates use a safety gloves.

Initial operation of the equipment

Make sure the room temperature is between 17 and 28°C (63 and 82°F) and relative humidity on max. 80%.

Before turning the equipment on make sure that the working area around the equipment is clean and free for easy movement.

Check if there are any leaks of water and all the required supplies and connections (hoses, power cable, and exhausts).

Check that the emergency stop button - placed next to the control panel - is released. If it is not, release it by turning it clockwise.

- Turn the main switch located on the rear side of the equipment on.
- If the emergency stop button is activated, then the following screen is displayed.

- When the emergency button is released the square outline is/changes to the green.

- To disarm the equipment, keep the button in the center depressed for two seconds (countdown of two seconds will appear) and following screen will be displayed.

- To switch the equipment on, keep the "**ON**" button depressed for two seconds (countdown of two seconds will appear). The main screen is then displayed.

- To switch the equipment off, press "**OFF**" button.

Main screen description

Display overview	Description
ALARM	This button allows access to the alarm history screen.
SERV	By pressing this button it is possible to access the service menu. (See Service Manual.)
JOB	This button allows access to the job/plate table.
OFF	By pressing this button it is possible to switch the equipment off.
	This button allows access to the visualization screen. From visualization screen it is possible to set/reset hours/cycles counters too.
EXPO	By pressing this button it is possible to access the exposure section.
LF	This button allows access to the light finisher section.
DRY1 DRY2	By pressing these buttons it is possible to access the dryer 1/2 section.
DRY3 DRY4	These buttons allows access to the dryer 3/4 section.

Exposure section

By pressing EXPO button following screen is displayed.

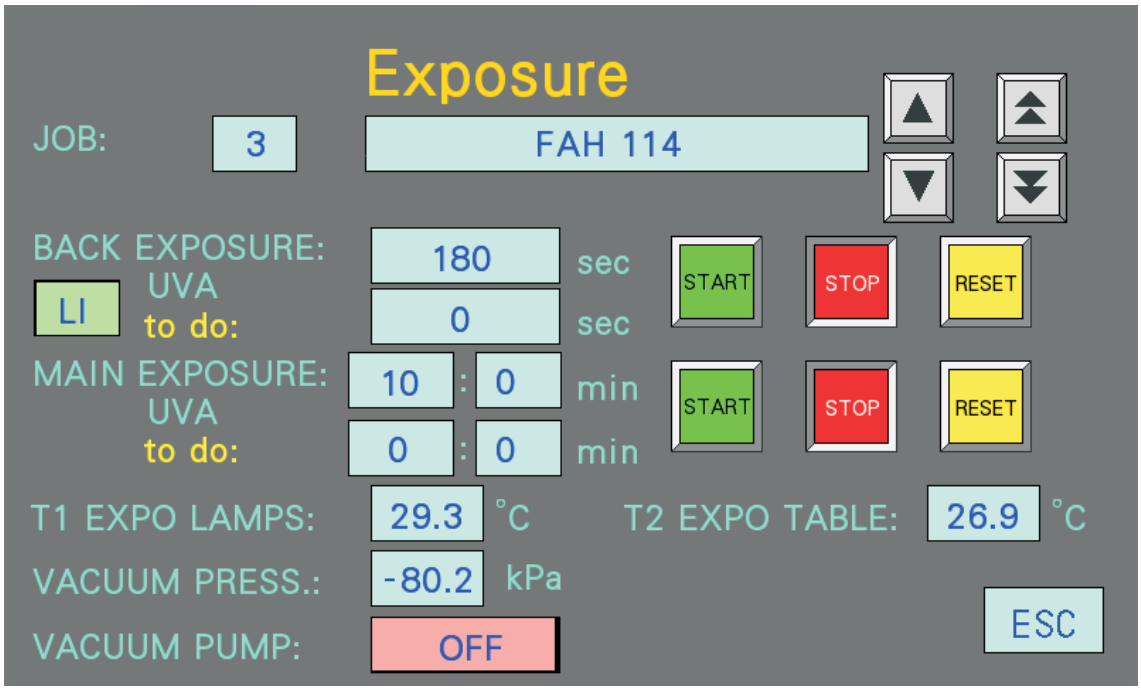

From this screen it is possible to choose the plate to expose by using the arrows ▲ and ▼ (to move in one job/plate up and down) or the arrows ⏫ and ⏬ (to move in five jobs/plates up and down). Afterwards back and main exposure times are loaded automatically.

It is possible to start, stop and reset back or main exposure cycle by pressing the corresponding button.

The LI field below the "BACK EXPOSURE:" and "MAIN EXPOSURE:" indicates whether light integrator is in use during back and/or main exposure. In the example above, the light integrator is used for back exposure, but not for main exposure. If LI field flashes after start of the exposure, it indicates recalculating of the exposure time.

Below the back and main exposure times are displayed fields **"to do:"** which display remaining time of the back or main exposure. Countdown of the remaining time starts after pressing START button.

At the bottom part of the screen are displayed the temperatures of the exposure lamps and the exposure table (in °C or °F depending on the setting - see later in this manual) as well as the vacuum pressure (in kPa).

It is possible to start/stop vacuum pump by pressing ON / OFF button.

To turn back to the main screen, press ESC.

Light finisher section

By pressing LF button following screen is displayed.

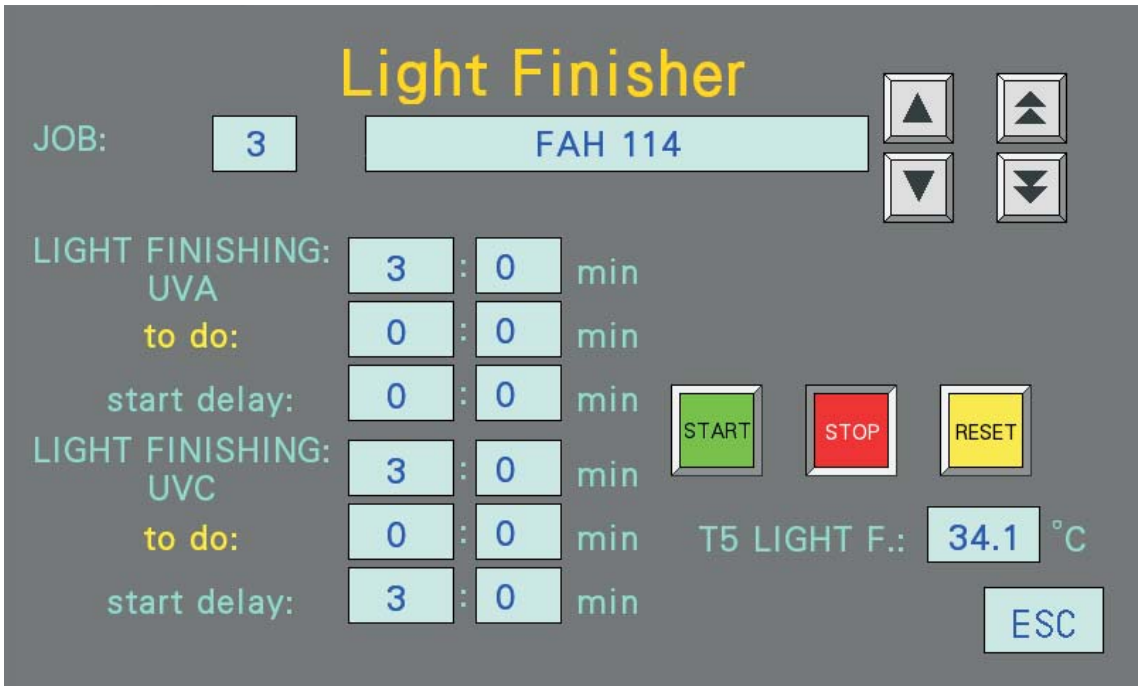

From this screen it is possible to choose the plate to light finish by using the arrows ▲ and ▼ (to move in one job/plate up and down) or the arrows ⏫ and ⏬ (to move in five jobs/plates up and down). Afterwards UVA and UVC light finishing times with their delays are loaded automatically.

It is possible to start, stop and reset light finishing cycle by pressing the corresponding button.

Below the UVA and UVC light finishing times are displayed fields **"to do:"** which display remaining time of the UVA and UVC light finishing. Countdown of the remaining time starts after pressing START button.

Here is as well displayed the temperature of the light finisher lamps (in °C or °F depending on the setting - see later in this manual).

To turn back to the main screen, press ESC.

Dryer section

By pressing DRY1 button following screen is displayed.

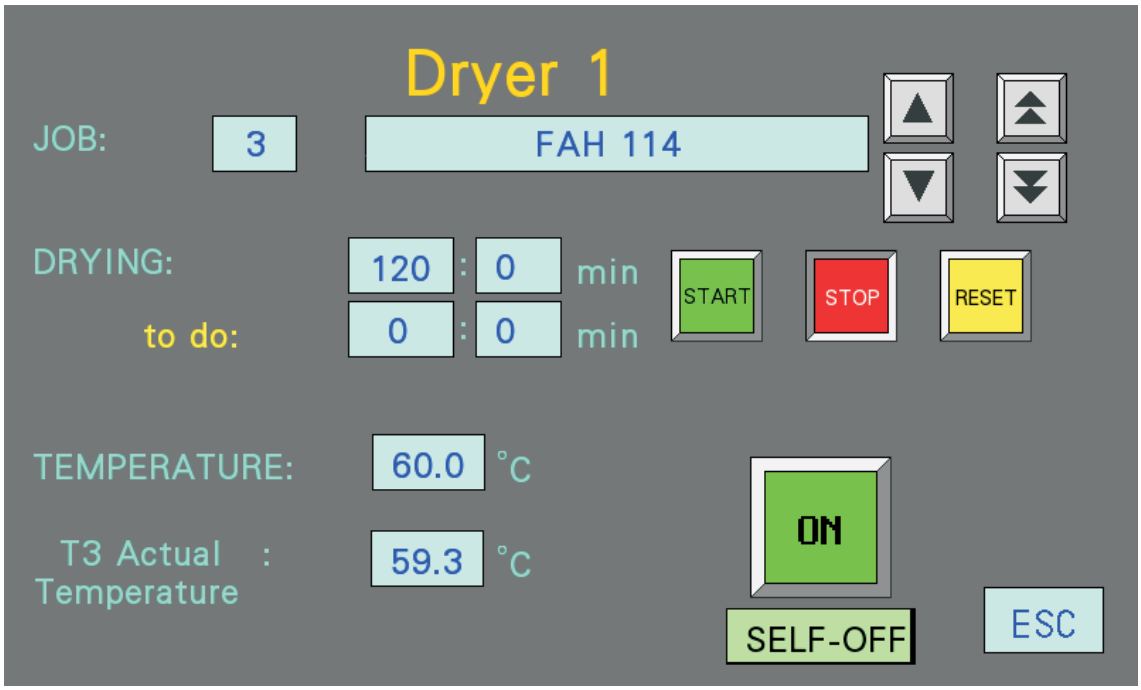

From this screen it is possible to choose the plate to expose by using the arrows ▲ and ▼ (to move in one job/plate up and down) or the arrows ⏫ and ⏬ (to move in five jobs/plates up and down). Afterwards drying time is loaded automatically.

It is possible to start, stop and reset dryer 1 cycle by pressing the corresponding button.

Below the drying time is displayed field **"to do:"** which displays remaining time of the back or main exposure. Countdown of the remaining time starts after pressing START button.

At the bottom part of the screen are displayed the temperature setpoint for the dryer heaters and the actual temperature in the dryers 1/2 (in °C or °F depending on the setting - see later in this manual).

It is possible to start the heaters by pressing ON button. The button changes to OFF. To stop it, press the button again and it will change back again.

To activate automatic switch off of the heating resistors in dryer 1/2 at the end of the last cycle, press SELF-OFF button. The button flashes and changes to SELF-OFF.

To turn back to the main screen, press ESC.

The same kind of information/functionality is available in the dryer 3 section.

By pressing DRY2 button following screen is displayed.

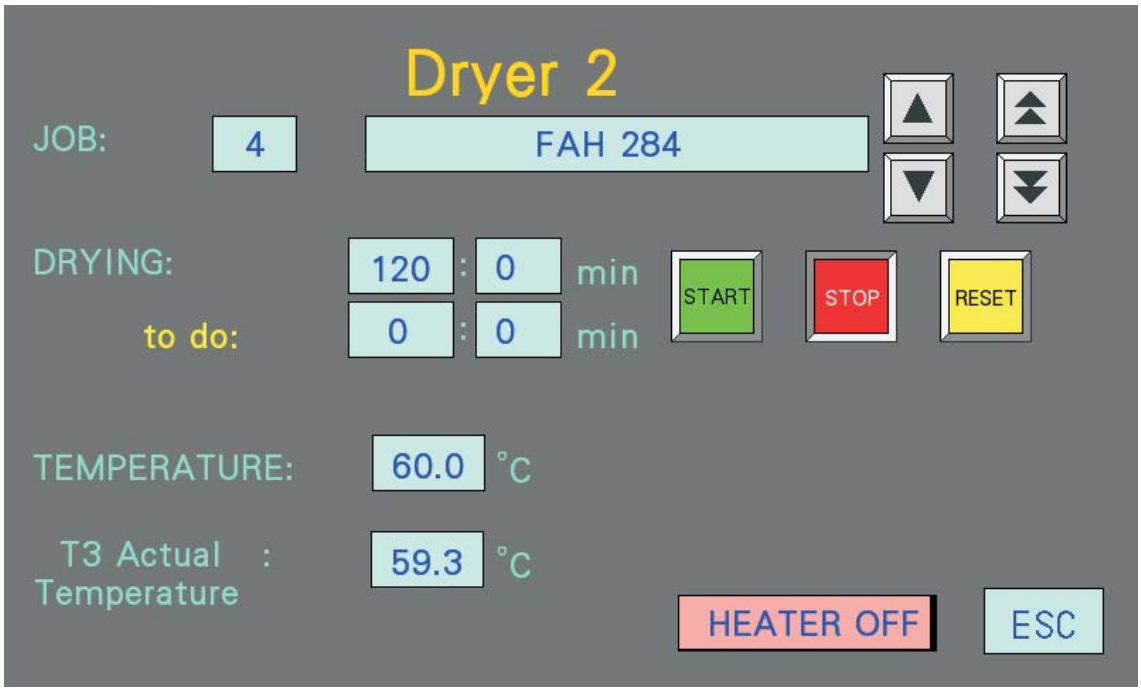

From this screen it is possible to choose the plate to expose by using the arrows ▲ and ▼ (to move in one job/plate up and down) or the arrows ⏫ and ⏬ (to move in five jobs/plates up and down). Afterwards drying times is loaded automatically.

It is possible to start, stop and reset dryer 1 cycle by pressing the corresponding button.

Below the drying time is displayed field **"to do:"** which displays remaining time of the back or main exposure. Countdown of the remaining time starts after pressing START button.

At the bottom part of the screen are displayed the temperature setpoint for the dryer heaters, the actual temperature in the dryers 1/2 (in °C or °F depending on the setting - see later in this manual) and the status of the heating resistors in dryer 1/2.

To turn back to the main screen, press ESC.

The same kind of information/functionality is available in the dryer 4 section.

Equipment status

To see the status of all processes in the equipment, press on the equipment on the main screen. Following screen is then displayed.

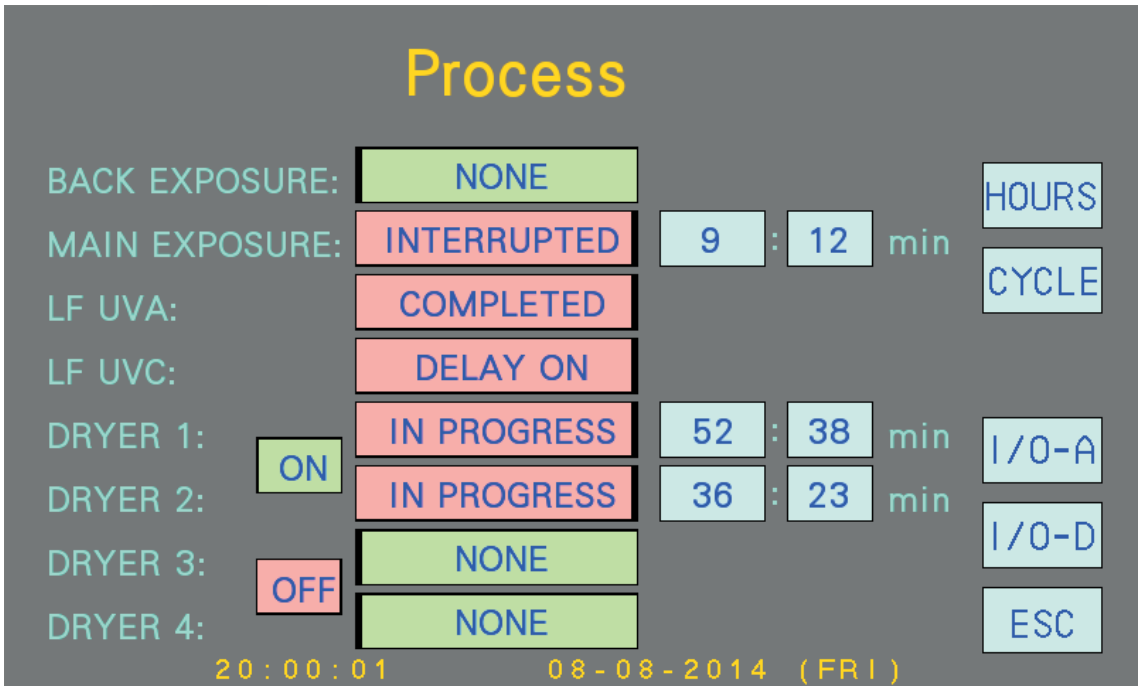

Next to the status of a process which is running or interrupted is displayed its remaining time. For drying processes is stated as well the status of heating resistors.

In the bottom of the screen is diplayed date and time.

From this screen it is possible to access hours and cycles conters as well as digital and analog inputs/outputs status screens.

To turn back to the main screen, press ESC.

Counters

By pressing HOURS button, the screen displaying hours counters appears.

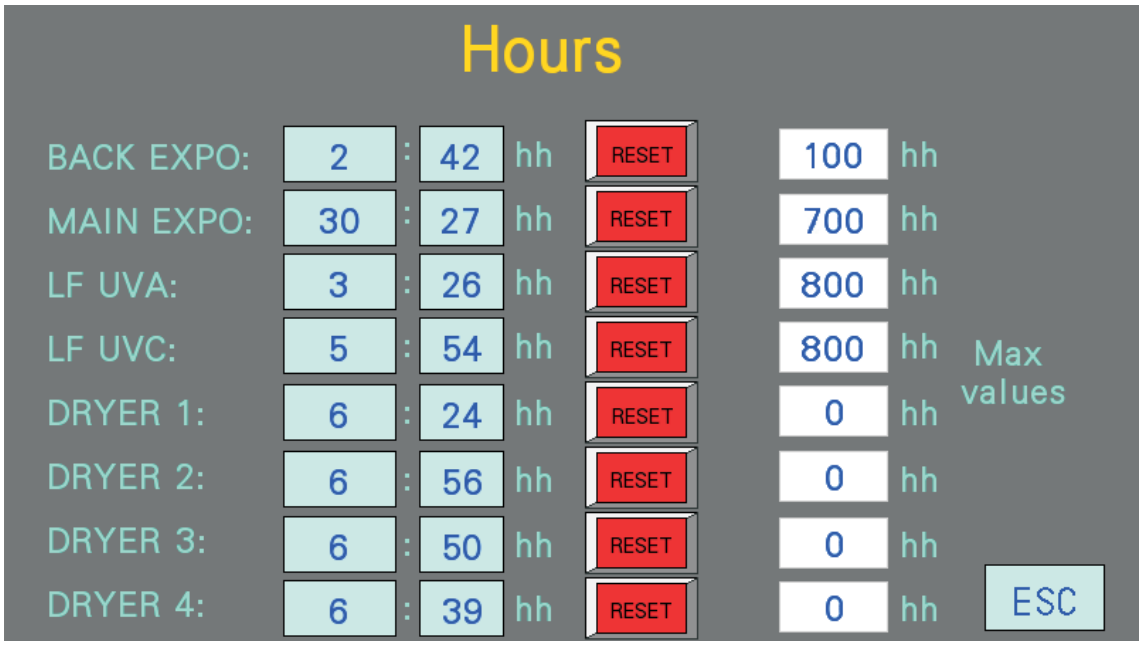

By pressing CYCLE button, the screen displaying cycles counters appears.

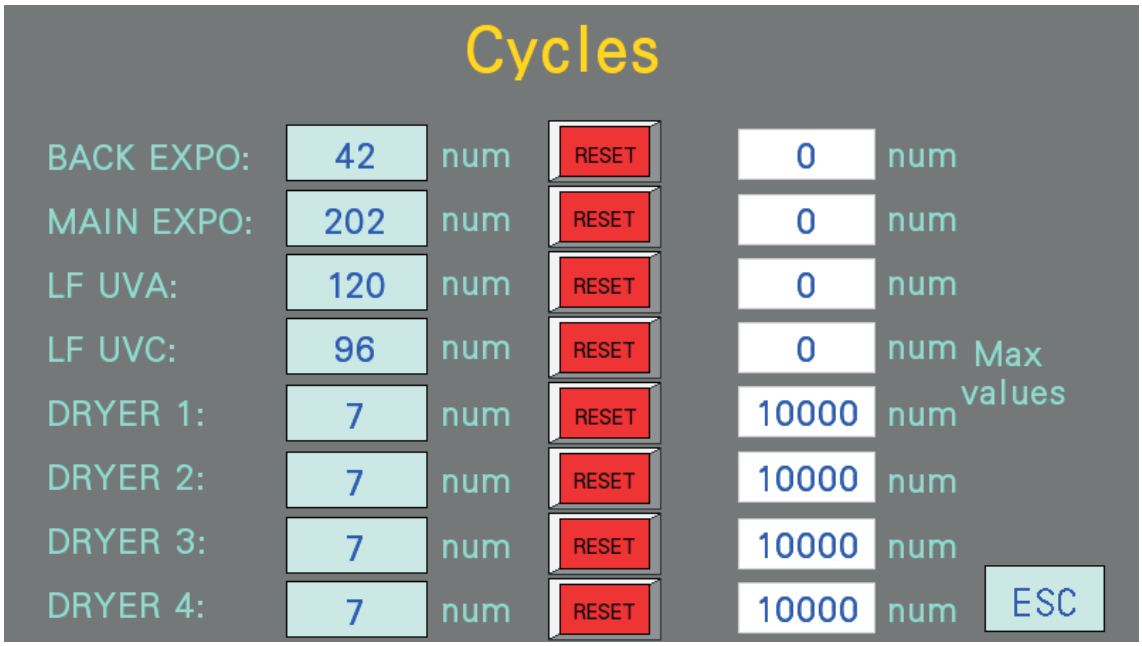

To reset the counter of a process, press its RESET button. In the pop-up window enter the user password **"963"** and afterwards the counter is reset.

To reset the maximum value of a process, press on it (a white button). In the pop-up window enter the user password **"963"**. Type required value and press **"ENTER"**. If the maximum value of a process counter is set to 0, the warning of the counter is disabled.

To turn back to the main screen, press ESC.

Analog and digital inputs/outputs

By pressing I/O-A button, the screen displaying status of analog inputs/outputs appears.

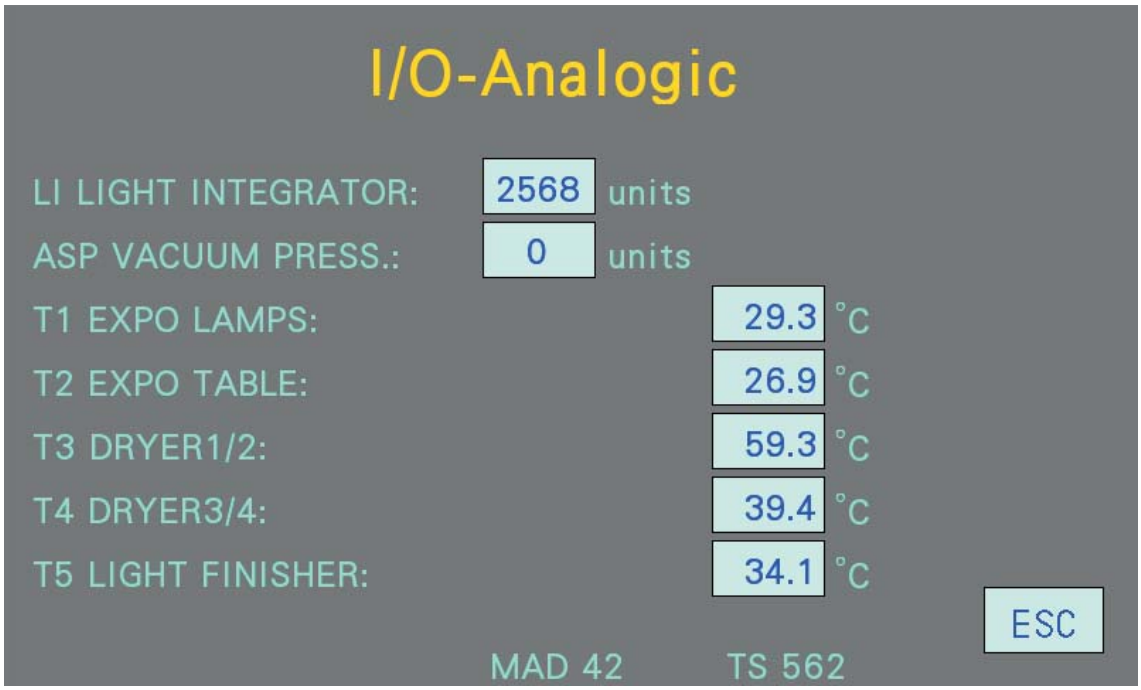

By pressing I/O-D button, the screen displaying status of digital inputs/outputs appears.

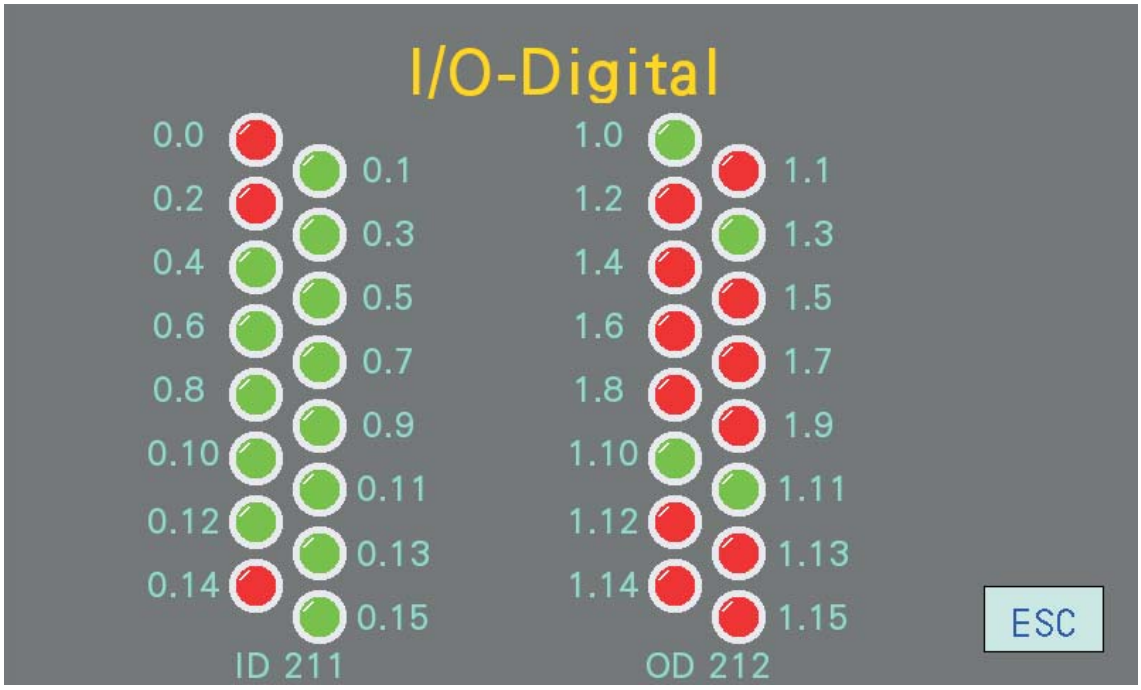

These screens display the actual status of analog inputs/outputs of MAD 42 and TS 562 units and the actual status of digital inputs/outputs of ID 211 and OD 212 placed in the electronics cabinet. Green colour indicates that the input/output is on, red colour indicates that the input/output is off.

To turn back to the main screen, press ESC.

Alarms and warnings

When an alarm or warning occurs, the sign is then flashing in the top of a screen and a text message/remedy is running below the sign. Depending on the type of alarm/warning, the corresponding sign is displayed.

Below the alarm/warning sign is running its description and remedy (if available).

Alarm

This sign indicates the alarm on the equipment. The alarm will stop the the equipment and require an operator action. There is acoustic signal for the alarm too. By pressing this sign, alarm/warning history screen is accessed. For further details regarding alarm/warning history screen please refer to the next page.

Warning

This sign indicates a warning. The warning will not stop the the equipment. There is acoustic signal for the warning too. By pressing this sign, alarm/warning history screen is accessed. For further details regarding alarm/warning history screen please refer to the next page.

Alarm/warning history screen

As well it is possible to access the alarm/warning history screen by pressing ALARM button from the main screen. The alarm/warning history screen looks like below.

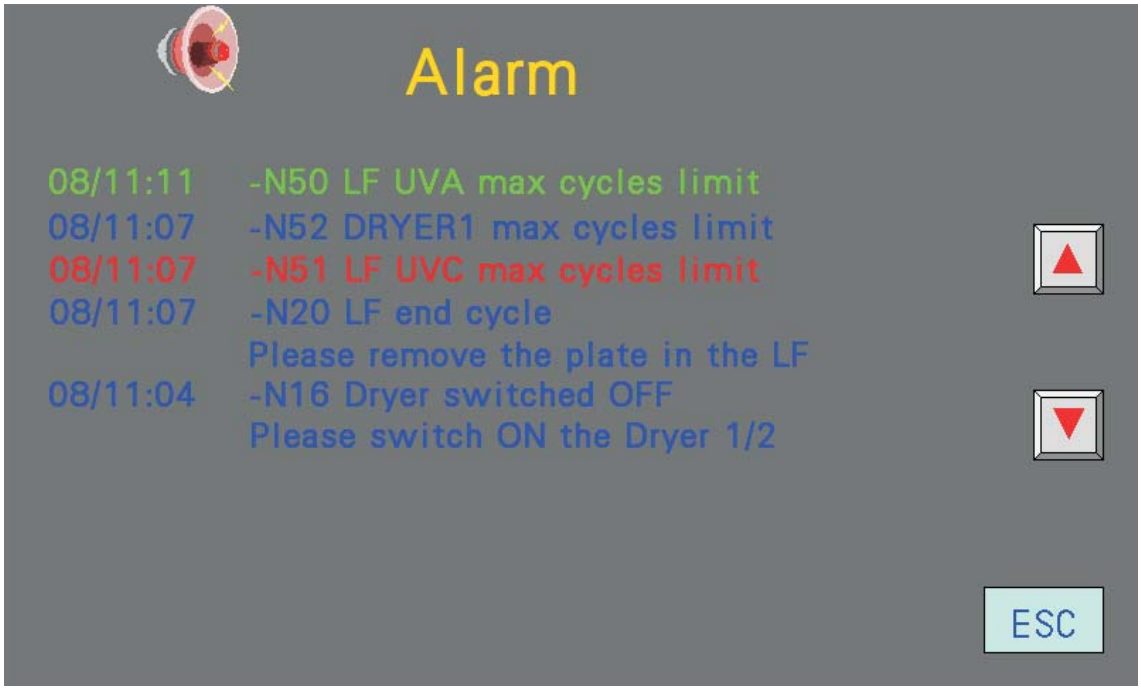

Here is displayed list of alarms/warnings recorded on the equipment and its date/time (day/hour:minute).

By pressing ▲ or ▼ button it is possible to scroll up or down the list.

Alarm/warning displayed blue indicates resolved alarm/warning.
Alarm/warning displayed red indicates active alarm/warning. To acknowledge it, press on active alarm/warning and this changes to green.

To turn back to the main screen, press ESC.

List of alarms/warnings

ID	Problem/description displayed	Remedy displayed
N1	Lid open alarm	Please check the lid or the sensor S2
N2	Low level in water tank	Please check the level in the tank
N3	LF drawer open / back panel open	Please check the LF drawer of KA2 relay
N4	Low Dryer exhaust	Please check ASP1
N5	DRYER 1-2 drawers open	Please check the drawer or S4-S5 switch
N6	DRYER 3-4 drawers open	Please check the drawer or S6-S7 switch
N7	DRYER 1-2 plate ready	Please check the plate in the DRYER 1-2
N8	DRYER 3-4 plate ready	Please check the plate in the DRYER 3-4

ID	Problem/description displayed	Remedy displayed
N9	Flow sensor alarm	Please check the sensor S10
N10	Thermic fault - Water pump	Please check Q16
N11	Thermic fault - Vacuum pump	Please check Q17
N12	Thermic fault - Exhaust dryer	Please check Q18
N13	Thermic fault - Dryer blowers	Please check Q19
N14	Thermic fault - Exhaust LF	Please check Q20
N15	Low level vacuum pressure	Please check vacuum foil or pump P1
N16	Dryer 1/2 switched OFF	Please switch ON the Dryer 1/2
N17	Dryer 3/4 switched OFF	Please switch ON the Dryer 3/4
N18	BACK EXPOSURE end cycle	Please remove the plate in the Exposure
N19	MAIN EXPOSURE end cycle	Please remove the plate in the Exposure
N20	LF end cycle	Please remove the plate in the LF
N21	DRYER 1 end cycle	Please remove the plate in the DRYER 1
N22	DRYER 2 end cycle	Please remove the plate in the DRYER 2
N23	DRYER 3 end cycle	Please remove the plate in the DRYER 3
N24	DRYER 4 end cycle	Please remove the plate in the DRYER 4
N32	PLC Low Battery	Please change the battery in CPU
N33	BACK EXPOSURE max hours limit	
N34	MAIN EXPOSURE max hours limit	
N35	LF UVA max hours limit	
N36	LF UVC max hours limit	
N37	DRYER 1 max hours limit	
N38	DRYER 2 max hours limit	
N39	DRYER 3 max hours limit	
N40	DRYER 4 max hours limit	
N48	BACK EXPOSURE max cycles limit	
N49	MAIN EXPOSURE max cycles limit	
N50	LF UVA max cycles limit	
N51	LF UVC max cycles limit	
N52	DRYER 1 max cycles limit	
N53	DRYER 2 max cycles limit	
N54	DRYER 3 max cycles limit	
N55	DRYER 4 max cycles limit	
N64	Alarm Light Integrator sensor	Please check the Light Integrator signal

Jobs

It is possible to store 40 jobs/plates with their process parameters (in fact only 38 as first job is called burning and serves for burning the lamps and one more is the test one).

By pressing the JOB button from the main screen, the job table is displayed.

Here are listed all jobs/plates. Scroll through the list is possible by using the arrows ▲ and ▼ (to move in one job/plate up and down) or the arrows ⏫ and ⏬ (to move in five jobs/plates up and down).

To see/edit parameters of required job/plate, move to the required job/plate (to be selected green) - in this example job no 3 - and press JOB.

To enter new job/plate, move the "empty" job/plate to the green field and press JOB.

To turn back to the main screen, press ESC.

By pressing the JOB button from the job table, the selected job/plate parameters are displayed. If job plate protect function is enabled (see page 2-17), it is necessary to enter the user password "**963**" first.

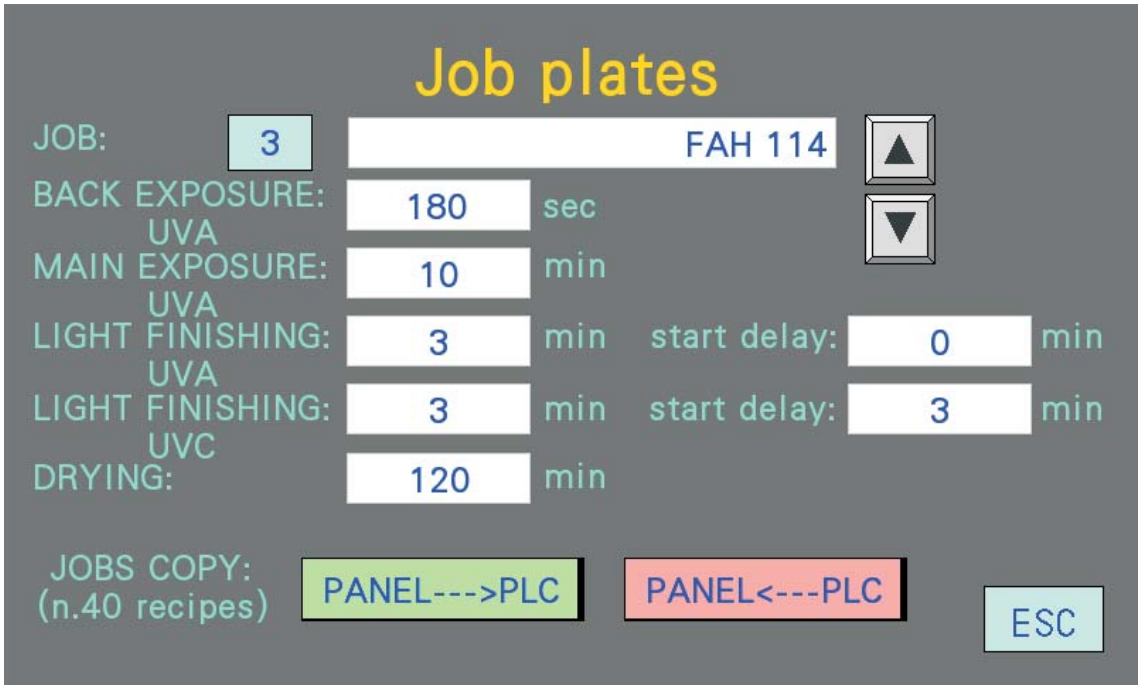

Here is possible to edit job/plate name and its parameters. By using the arrows ▲ and ▼ it is possible to move in one job/plate up and down.

All jobs/plates stored in the control panel can be transferred to the PLC unit and vice versa by pressing on the corresponding button. The button shortly flashes once.

To turn back to the job table, press ESC. Afterwards all changes are stored automaticaly.

Part 3: Making plates

Starting an exposure cycle

For handling the plates use a safety gloves.

- Open the top lid and put the plate on the cooled table to make the back or main exposure. When doing main exposure on conventional plate, put the vacuum foil on top of the plate (not needed for back exposure or digital plates).
- Select the required plate type.
- Make sure the back and main exposure times are correct.
- Close the top lid.
- Start the vacuum pump (if vacuum foil is in use) and check the vacuum level.
- To start an exposure, press START button.
- During the exposure process, the **"to do:"** field displays the remaining time for back or main exposure. If light integrator is in use, the time of an exposure can differ as it depends on UV intensity and light integrator calibration.
- At the end of the cycle the buzzer sounds (if this function is enabled) and remaining time displays "0".
- Stop the vacuum pump, if it was used in the cycle.

Prior to starting another exposure cycle (back or main), it is needed to confirm the end of the previous cycle by pressing on the RESET button or to open the top lid and to remove the plate. At this point the remaining time displays "0". The equipment is now ready to start another exposure cycle.

It is possible to stop an ongoing cycle by pressing on the STOP button.

If emergency stop button is activated during an exposure cycle, the cycle stops. After releasing it and switching the equipment on, it is possible to continue the cycle by pressing START button from the exposure screen.

Starting a dryer cycle

For handling the plates use a safety gloves.

- Start the heater from dryer screen by pressing ON button.
- Wait until the temperature reaches the setpoint.
- Open the drawer, put the plate in and close the drawer.
- To start a drying process, press START button.
- During whole process the display shows remaining time for the cycle.
- At the end of the cycle the buzzer sounds (if this function is enabled) and remaining time displays "0".

After the cycle end and removing the plate from the drawer, the heater and blower does not stop automatically (only if self-off function on last plate is active).

Prior to starting another dryer cycle, it is needed to confirm the end of the previous cycle by pressing on the RESET button or to open the drawer and to remove the plate. At this point the remaining time displays "0".
The equipment is now ready to start another dryer cycle.

It is possible to stop an ongoing cycle by pressing on the STOP button.

If emergency stop button is activated during a dryer cycle, the cycle stops. After releasing it and switching the equipment on, it is possible to continue the cycle by pressing START button from the dryer screen.

Starting a light finisher cycle

For handling the plates use a safety gloves.

- Open the drawer and put the plate in.
- Close the drawer.
- Select the required plate type.
- Make sure the times are correct.
- To start a light finishing process, press START button from the light finisher screen.
- During whole process the display shows remaining times for UVA and UVC cycles. Cycles will start according to their delays. If delay of cycle is set to 0, cycle starts immediately. If delay of both cycles is set to 0, both cycles start together.
- At the end of the cycle the buzzer sounds (if this function is enabled) and remaining time displays "0".

Prior to starting another light finisher cycle, it is needed to confirm the end of the previous cycle by pressing on the RESET button or to open the drawer and to remove the plate. At this point the remaining time displays "0".
The equipment is now ready to start another dryer cycle.

It is possible to stop an ongoing cycle by pressing on the STOP button.

If emergency stop button is activated during a light finisher cycle, the cycle stops. After releasing it and switching the equipment on, it is possible to continue the cycle by pressing START button from the light finisher screen.

Part 4: Maintenance

General

Maintenance activities are listed in the Maintenance Chart delivered with the equipment.

Filling up the cooler tank

This operation has to be carried out with the equipment switched off.

- Remove the cover of the cooler tank located on the rear side of the equipment.

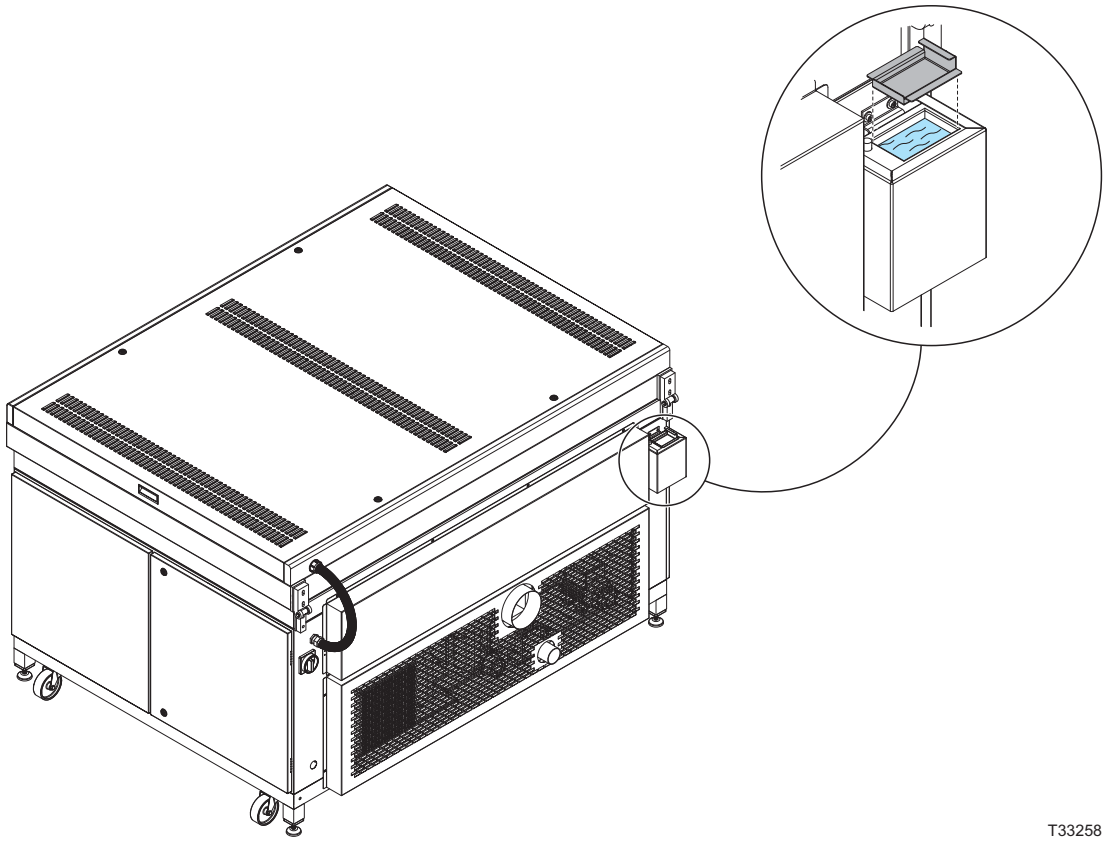

- Prepare necessary amount of a solution based on 70% of demineralized/distilled water, 30% of ethylene glycol and a few drops of algaecide (antifoam action).
- Fill the tank to the maximum.
- Reinstall the cover of the cooler tank.

Cleaning the equipment

- Clean the equipment covers from dust and dirt by using a clean damp cloth and vacuum clean the openings for the main exposure fans.

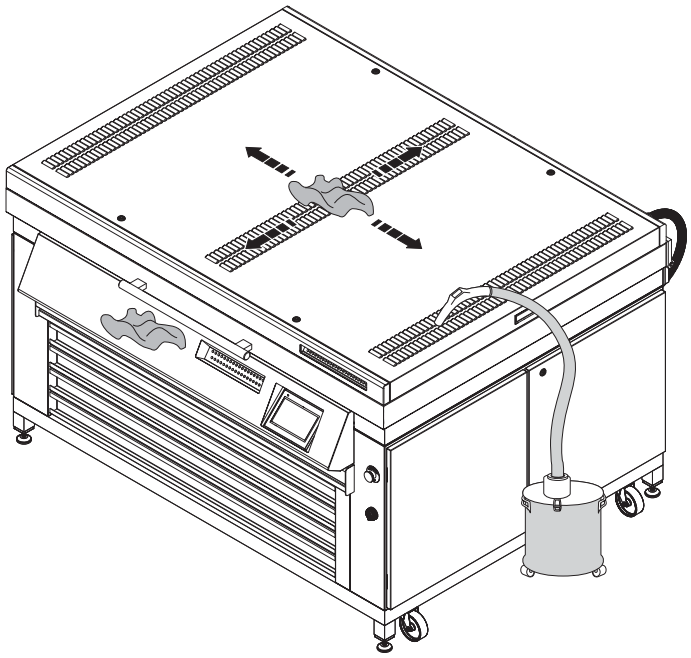

T33255

Exposure lamps UV output measurement

- Open the top lid and place the sensor of a Kühnast meter on top of the exposure table.
- Close the top lid.
- Run an exposure cycle. Make sure that the temperature of lamps is at least 38°C.
- Repeat the UV output measurement at another eight points of the exposure table by using a Kühnast meter. Record the data in a UVA spreadsheet with average output, and % maximum variation.
- When finished and replacement of lamps is not needed, open the top lid, remove the sensor and close the top lid again.

UV lamps replacement

General

- The tube is fragile, take a great care while unpacking, moving and installing the tube.
- Only clean tubes ensure uniform light emission. Before installation, ensure the tubes are clean.
- Perspiration and sebaceous oil from the skin form white smudges which become etched on the quartz surface of the tube, when the tube reaches its normal operating temperature. The etched areas of the tubes inhibit the transmission of the desired UV energy.

Make sure the equipment is turned off and disconnected from the electricity supply, the mains supply is locked off using a padlock or similar, and then a check made to ensure that the equipment will not run.

Do not handle the tubes with bare hands. Wear cut resistant gloves.

Always use safety glasses when handling lamps.

Fluorescent tubes contain small amounts of mercury. Used lamps should be disposed according to local laws and regulation.

UV-C light radiation is dangerous for human skin and particularly the eyes. Even a short exposure time may cause burnings in the lower skin layers and damages the eyes retina. Due to the *safety* systems installed, it should never be required to check the UV-C tubes by view the UV-C light directly when operating, maintaining or servicing the equipment. However, in case of need it is mandatory to wear a welding helmet with at least shade 6, safety clothes and gloves.

Two persons are required for UV lamp replacement.

The UVA exposure tubes have a built-in reflector which is applied in a semi-circle over the entire length of the tube. The reflector is recognizable by the white no transparent colouring of the glass in the tube. The reflector is designed to direct the light. When installing ensures that the reflection side is correctly located (non transparent section should be directed toward the plate.

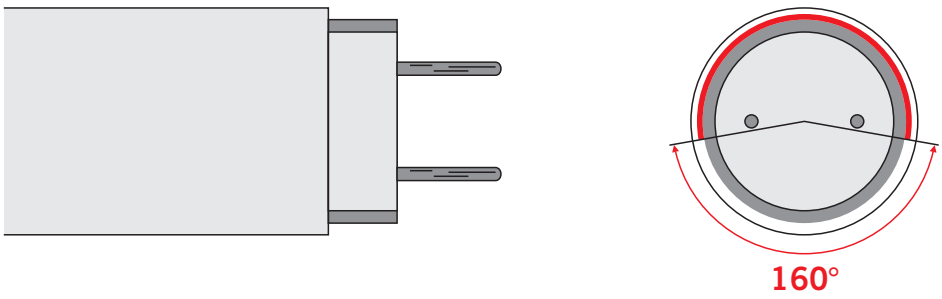

When installing new lamps a "burning" of the lamps is recommended to get correct performance and to stabilize them. Run the lamps prior to use the equipment (see the Service Manual).

Exposure lamps replacement

Make sure the equipment is turned off and the main switch is locked in "OFF" position.

- Open the top lid of the equipment.
- Remove the lamps by turning them 90°.
- Make sure that the socket position is correct on both sides for inserting the UV lamp. To adjust the socket correctly it is recommended to use a flat screwdriver.
- Insert the new lamp in the socket on both sides and lock it by turning 90°.
  Note the little mark on the UV lamp ring which must be visible (in line with the socket opening) when the lamp is installed correctly. Make sure that the lamps are installed in alternate left/right position to ensure proper light distribution.

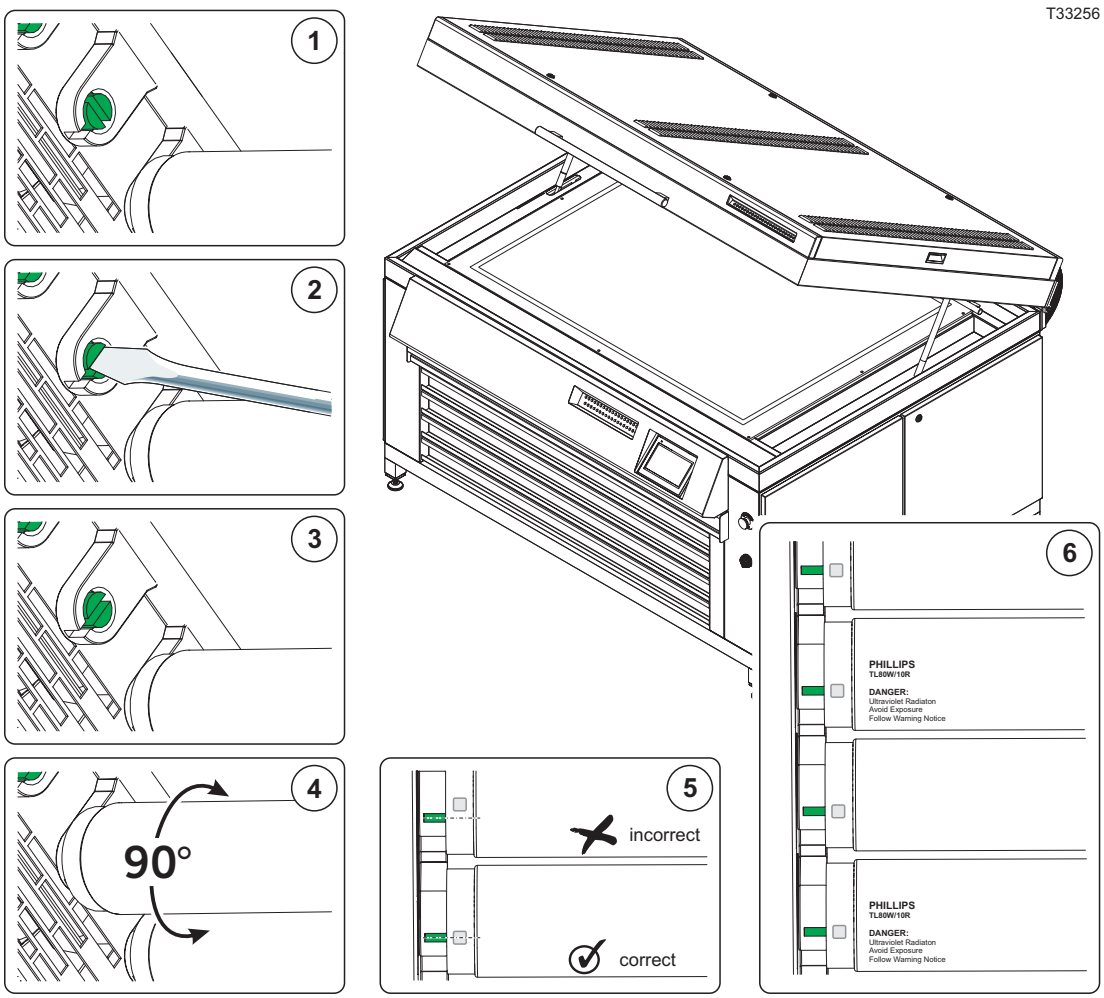

- Close the top lid.
- Unlock the main switch and turn the equipment on. Burn the lamps (see the Service Manual).

Recalibrating light integrator after changing the lamps may result in changing the plate exposure times.

The UVA fluorescent lamps contain mercury. Dispose them according to local, state or federal laws.

Light finisher lamps replacement

Make sure the equipment is turned off and the main switch is locked in "OFF" position.

- Remove the light finisher drawer.
- Remove the rear panel of the light finisher.
- Remove the locking screw of the lamps holder drawer.
- Pull out the lamps holder drawer from the equipment's front.

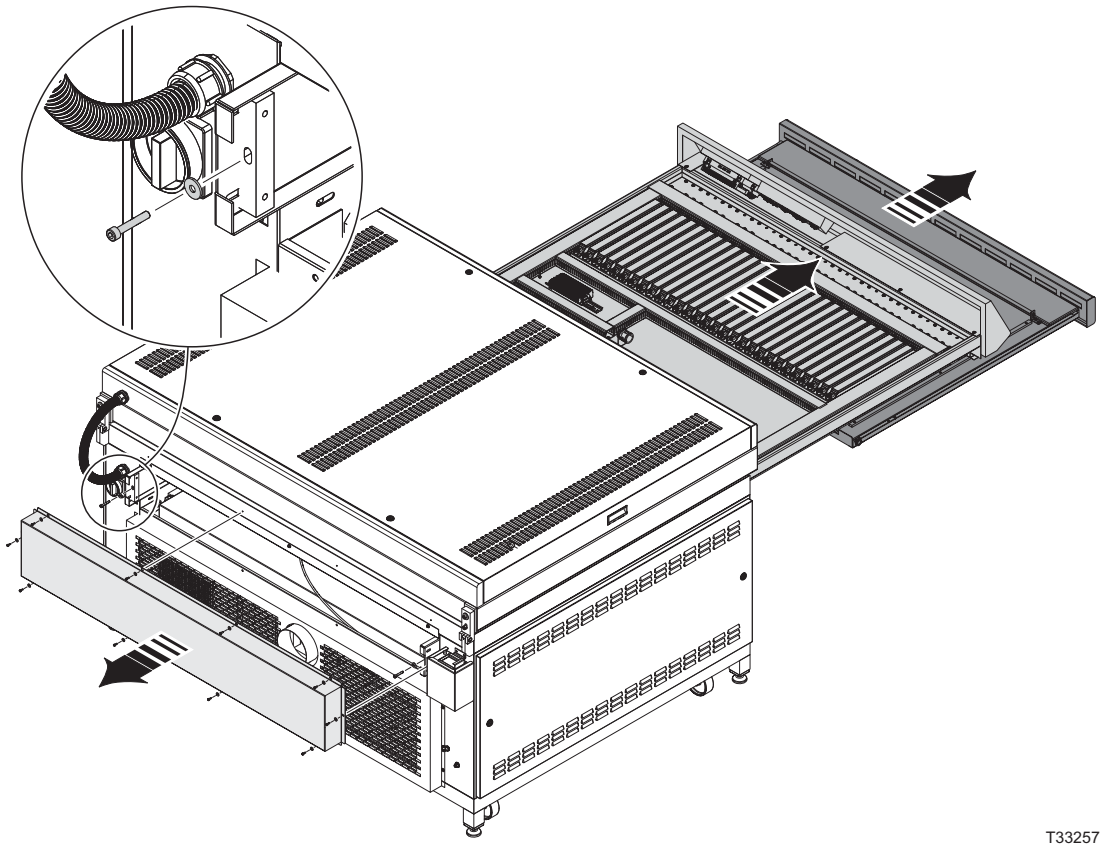

T33257

- Replace the UV lamps as described on previous page.
- Push in the lamps holder drawer.
- Secure the lamps holder drawer with the locking screws at the back.
- Reinstall the rear panel of the light finisher and lock it by using triangle shaped key.
- Unlock the main switch and turn the equipment on.
- Burn the lamps (see the Service Manual).

The UVA and UVC fluorescent lamps contain mercury. Dispose them according to local, state or federal laws.